Health and Safety Alert

WHAT HAPPENED?

A JCB 540-170 telehandler overturned through 45 degrees as it was lifting a 3 pan wall shutter weighing 1100 Kg. The foreman on the receiving side of the wall was guiding the shutter into the toe of the wall and he could not see the driver. At the same time the banksman was making his way from the telehandler side of the wall to assist the foreman. The driver began to boom out and the telehandler began to overturn. The foreman was struck, fell to the ground and got trapped underneath the shutter. He found refuge beside a mound of earth that suspended the shutter above ground. He suffered 3 broken ribs and a punctured lung.

The telehandler was hired to the formwork subcontractor. The latter provide his own trained CSCS driver and banksman.

Bow shackle connected to forks bar.

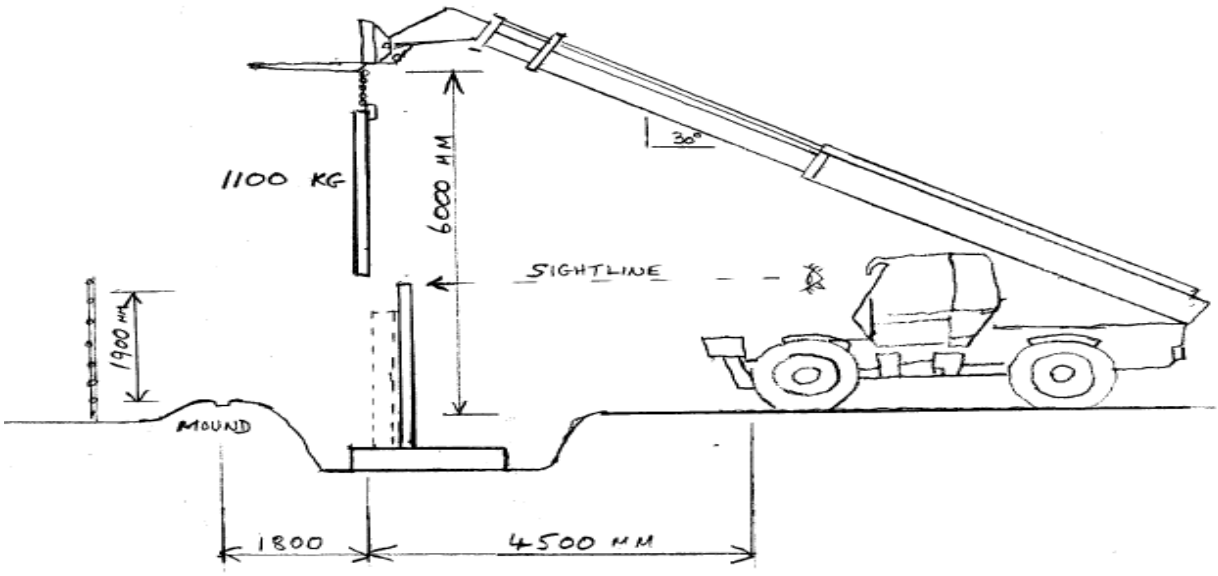

<u>Fig 1:</u> Section showing wall & suspended shutter prior to incident.

Health and Safety Alert

WHAT WE FOUND:

- The outriggers were not engaged. The load chart in the cab was not used to check that the telehandler could perform the lift at the actual boom extension and boom angle. Guide ropes were not used to safely move the shutter to its destination. Vision was restricted between driver and foreman.
- The proprietary crane hook forks attachment for lifting a suspended load was not in use (see bottom of chart ☆). Instead the bow shackle was secured to a 50mm diameter forks bar. There is no chart in the cab for this forks bar arrangement. The chart open in the cab is below and is for use with crane hook attachment:

Stabilisers Down Chart (Boom Angle 30° Reach from wheel 4.5 m) **Stabilisers Up Chart**

The above chart shows that when using the crane hook arrangement with the stabilisers down the telehandler can lift a maximum of 1000 Kg at our boom reach and angle. The telehandler could have lifted a 2 pan shutter but not 3. In this instance the maximum allowable lifting load was exceeded.

- There is an industry wide over reliance on the use of "safe load indicators" (SLIs) in the cab. The term SLI is more accurately referred to as LLMI (longitudinal load moment indicator). It merely senses the load upon the back axle as the telehandler approaches its limitations. <u>It is not to be used to determine if the telehandler will lift the load!</u> Driver training and the manual state that LLMIs are never a substitute for:
    - **knowing the weight of the load** to be lifted
    - **reading the relevant cab chart** to see that the lift can be safely performed **at the planned boom extension and angle**

A re-enactment of the lift has shown that the LLMI signal and sounder in the cab were being ignored during the lift.

Health and Safety Alert

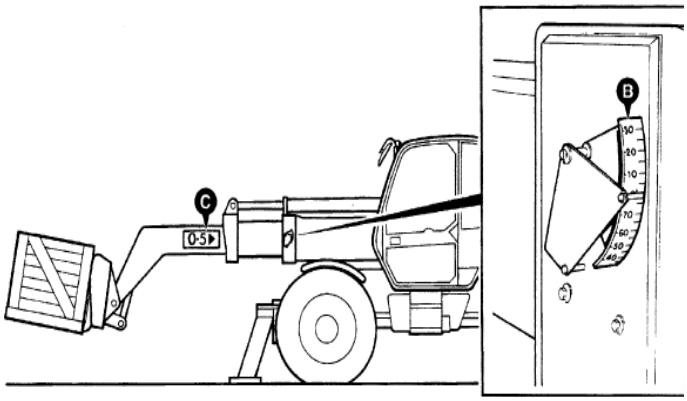

Fig 2 from manual:

C depicts boom extension, B shows boom angle

- Since this incident occurred a site blitz on telehandler use including observations and driver interviews has shown that a combination of inadequate load weight information, inconsistent and in some cases the non-use of load charts and an over reliance on LLMIs is industry practice.

- The risk assessment and method statement for performing the lift tasks did not adequately assess the loads to be lifted. A lift plan would have triggered an assessment of the many site variables that need to be reviewed for safely performing suspended lifts with a telehandler e.g. accurate weight of shutter, distance from telehandler to wall, boom angle and distance, level variances over wall length, ground conditions (bearing and level), visibility, wind etc. etc.

LEARNING AND ACTIONS POINTS:

- A second site blitz on the use of telehandlers focussed on the availability and reference to the **telehandler manual**, the supervisor and driver **knowledge of load weight** and **driver competence in use of the load chart** to be formally conducted. Cease all telehandler lift tasks if any of these 3 elements are not in place and fully understood.
  Action: All Sisk safety staff and site agent / foreman.

- Lift plans are now required for all suspended load tasks involving telehandlers. Until such time as we develop a user friendly and efficient "ready reckoner" to manage these suspended telehandler lifts we will use the existing FM-HS-96 lift plan format.

  Action: Sisk crane coordinators and site agent/foreman.

- ALL telehandler lifting and lowering activities will fully engage the outriggers. The boom will be fully retracted and in the lowered position when unit is in motion. This is critical and must be challenged if witnessed.
  Action: Sisk site agent & foreman.

Health and Safety Alert

Appendix to Alert: Reading the specific telehandler manual.

The telehandler manual, sometimes referred to as the operator handbook, requires the driver to check what boom attachment is fitted to the machine, then turn to the correct load chart in the cab. There is a load chart for lifting pallets using the fork attachment. There is a separate load chart for suspended loads using the hook load attachment, boom extension etc. There is a separate chart in each category for stabilisers lowered or raised with the exception of some buggiscopic units that do not have stabilisers. You must check that the driver is reading the correct chart! The Handbook states that the operator must know the weight of the load before picking or placing it. The following is an extract from the JCB 540-170 handbook :

"Knowing the weight of the load to be lifted the operator looks at the load chart to find the coloured segment with the next highest weight. This is the Maximum Load Segment for the load. He then extends a line on the chart so that the left-hand edge D and the upper edge E of the segment show the machine stability limits for the load. The operator must not angle or extend the boom beyond these limits."

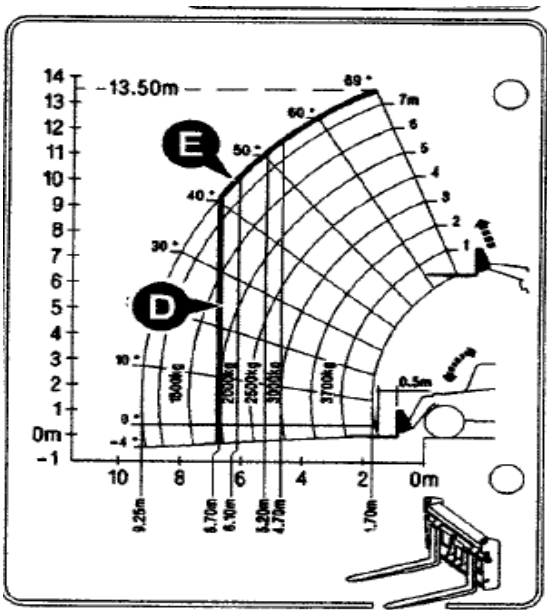

Fig 3 from manual:

Sample chart showing how chart is used once weight of load is known.

Tony Sheridan **30th May 2012**